Miele

T1 Ventless Heat Pump Dryer

TWI180 WP, TWF160 WP, TWB120 WP



Shown: WWH 660 WCS (Left) next to TWI 180 WP Right)
Please note: This information is subject to change

T1 Ventless Heat Pump Dryer

SPECIFICATIONS	
Unit Width	23 1/2" (596 mm)
Unit Height	33 1/2" - 34 3/4" (850 - 882 mm)
Unit Depth- Excluding Door Dimension	23 5/8" (600 mm)
Unit Depth- Including Door Dimension	25 5/16" (643 mm)
Door Clearance	18 1/4" (463 mm)
Built-In	
Minimum Cabinet Opening Width	23 5/8" (600 mm)
Minimum Cabinet Opening Height	33 1/2" (850 mm)
Interior Volume	
Drum Volume	4.1 (116 l)
Rated Load Capacity	17.6 lbs (8 kg)
Plumbing	
Drain Hose	5' 3" (1.6 m) flexible drain hose is supplied. May be extended up to 13' (4 m) Delivery head must not exceed 5' (1.5 m)
Electrical	
Electrical Requirements	120V, 60Hz, 15A 220V, 30A, 60Hz (Used with NEMA Adapter)
Power Cord	NEMA 5-15 plug, 6'7" ft (2 m)
Shipping	
Shipping Weight	145 lbs (66 kg)
Shipping Dimensions	26" W x 37" H x 27 3/16"D
Support	
Call Miele	(800) 565-6435
Miele Website	www.miele.ca
20/20 Link	2020technologies.com



TWI 180 WP



TWF 160 WP



TWB 120 WP

Installation Accessories:



WTV 502
Stacking kit

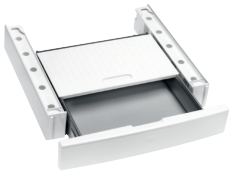

WTV 512
Stacking kit with drawer



WTS 510
Stacking kit with drawer



NEMA Adapter
NEMA 14-30/2x5-15 Adapter

PRODUCT VIEWS

Isometric View

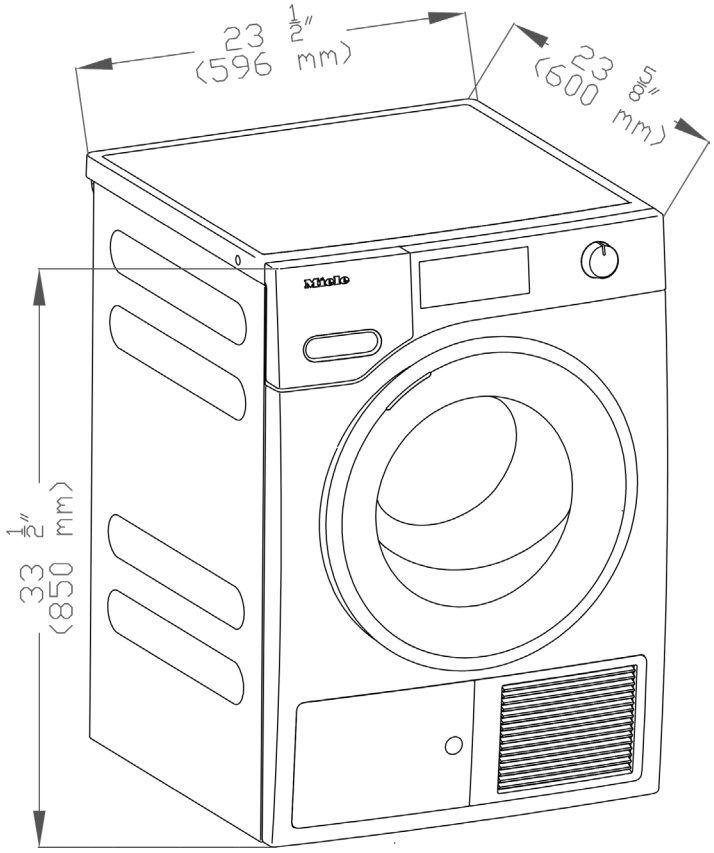

Front View

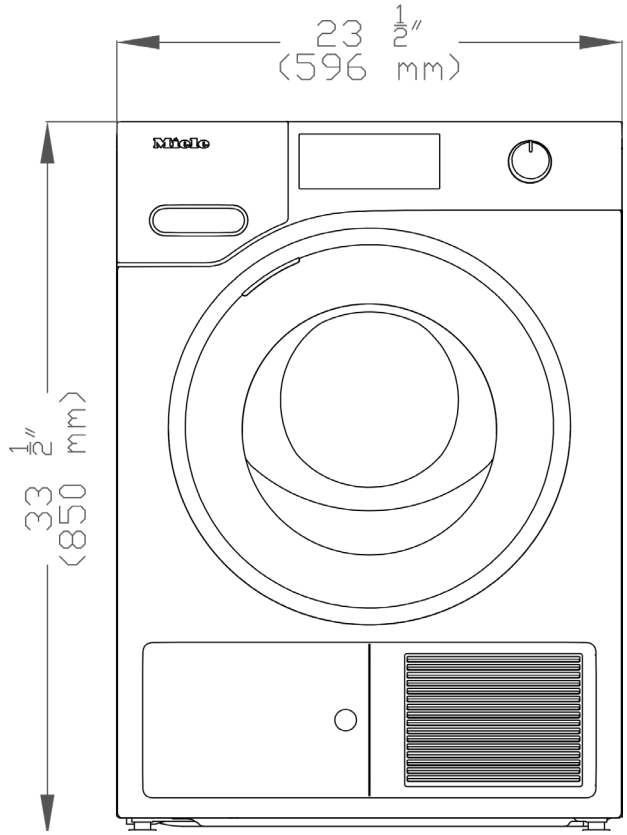

PRODUCT VIEWS

Side View

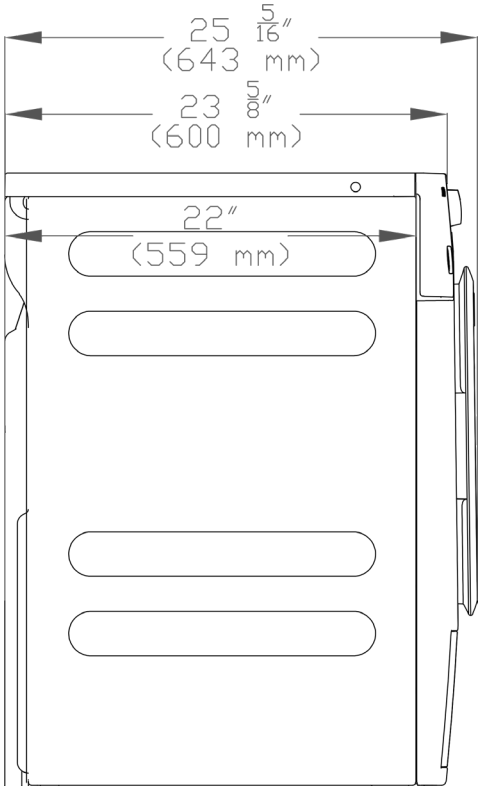

Side View With Door Open

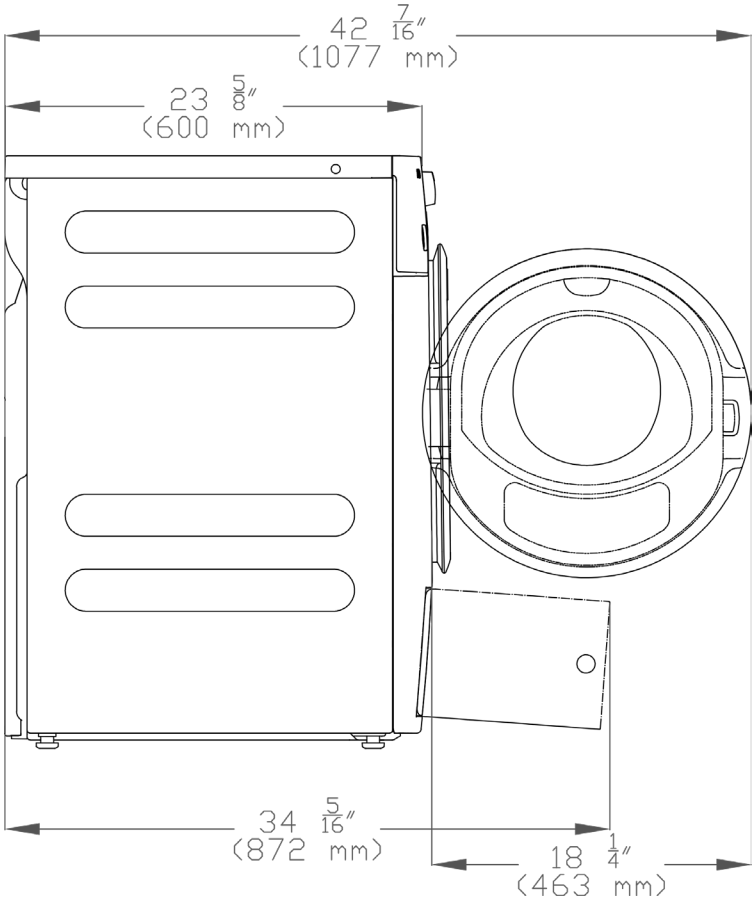

PRODUCT VIEWS

Door Swing

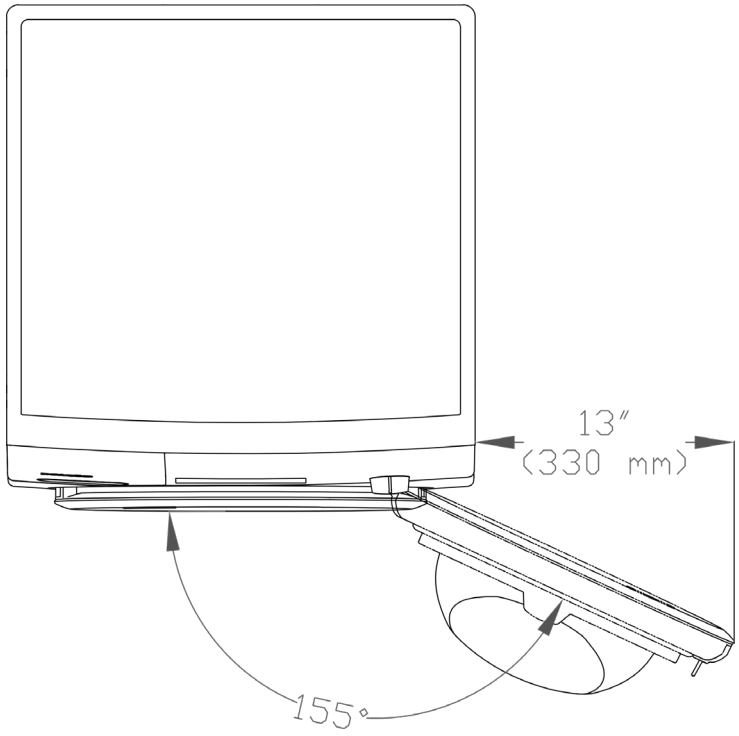

Rear View

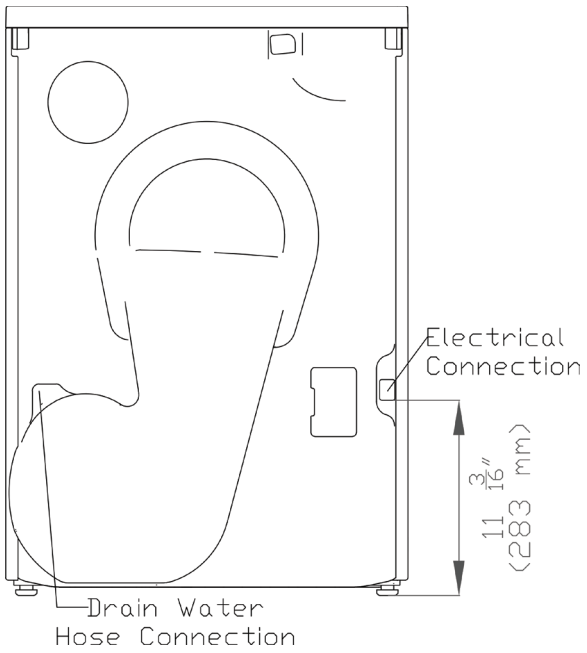

Built-in Niche

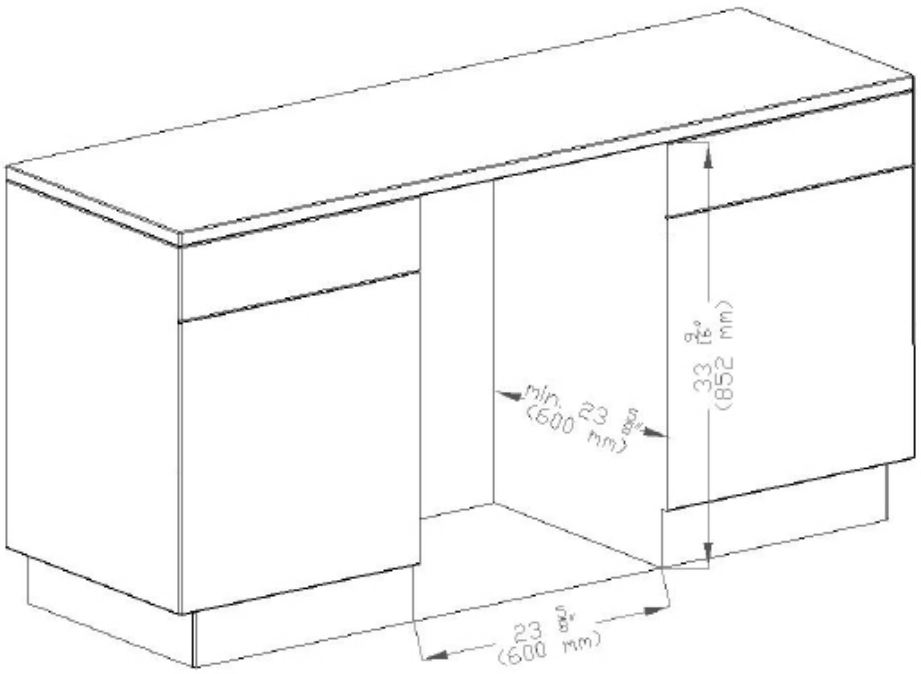

Stacked in Closet

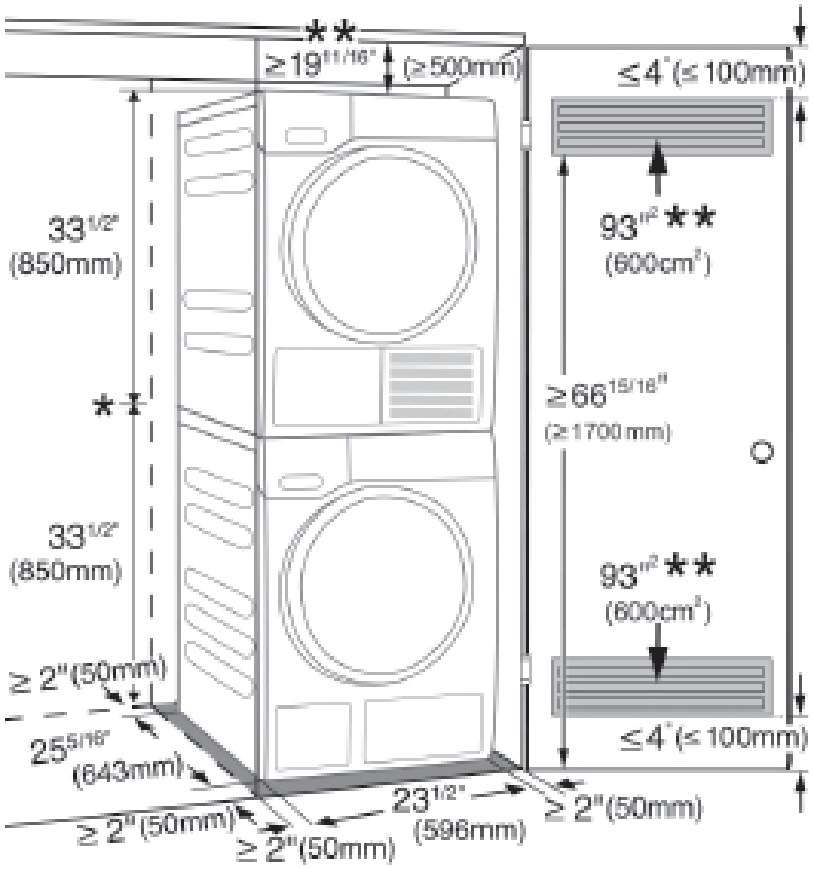

* Height with Stacking Kit
WTV502 = 67 3/8" (1711 mm)
WTV512 = 71 1/8" (1806 mm)

** If it is not possible to fulfill the dimension specification you may have longer drying and process time.

Stacking Kit WTV 502
(Optional Accessory)



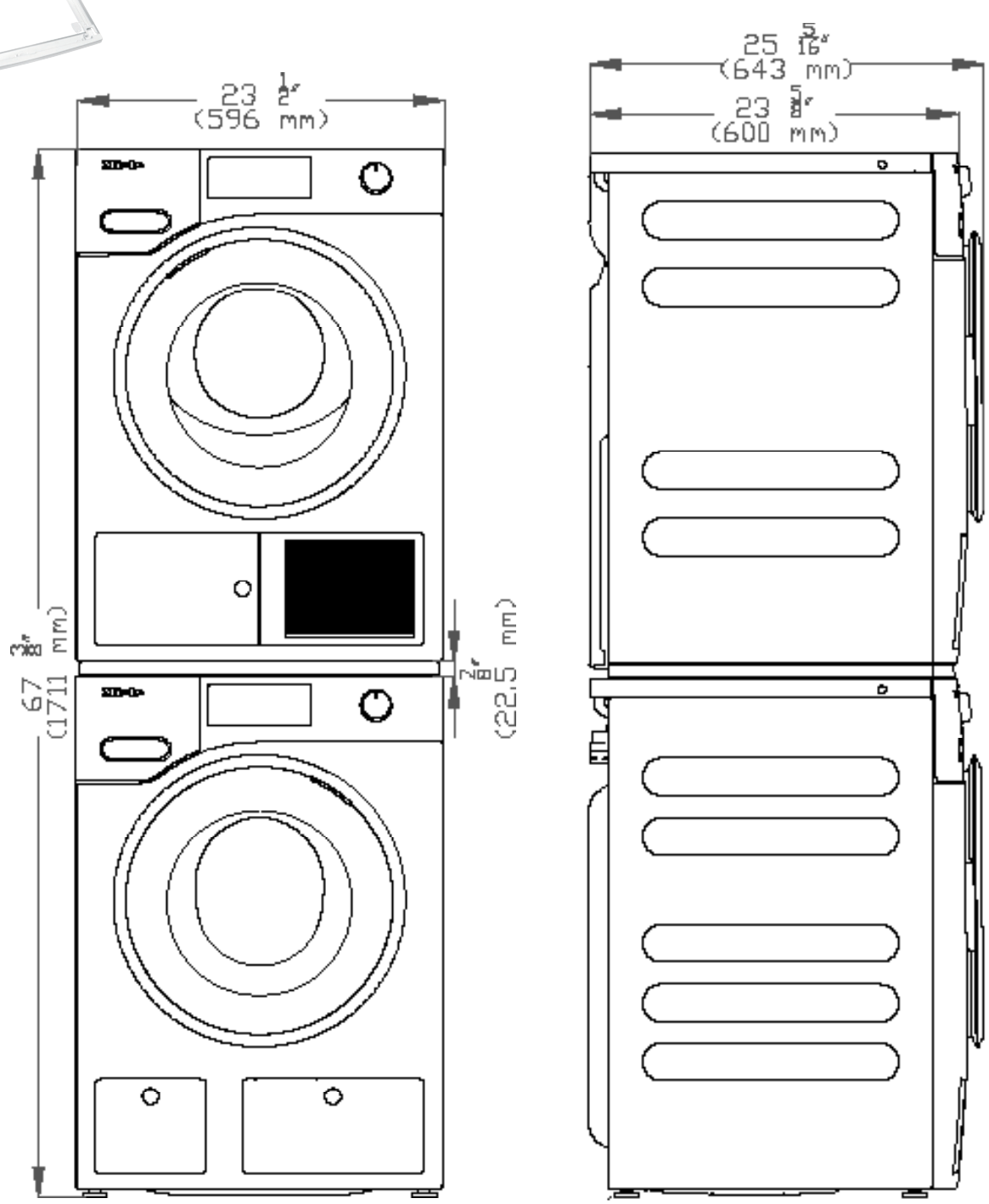

Stacking Kit With Drawer WTV 512
(Optional Accessory)

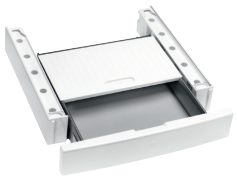

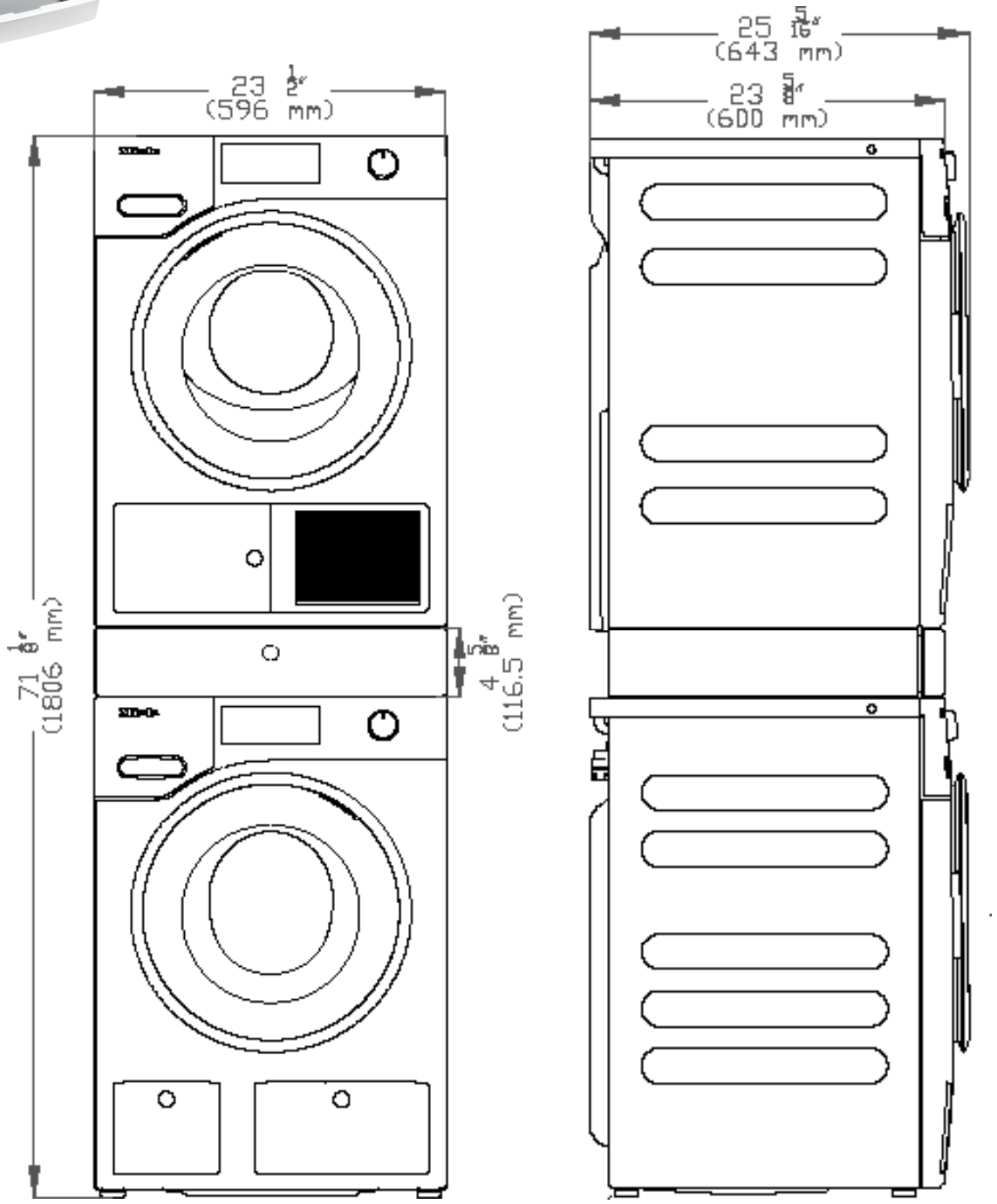

Plith WTS 510
(Optional Accessory)



